RE 18331-07/04.10
Replaces: RE 00199/11.07

Flow divider

Common cavity

Cartridge style in manifold

DSDN-C ON.07 - K - 00 - Y - Z - W

Dimensions

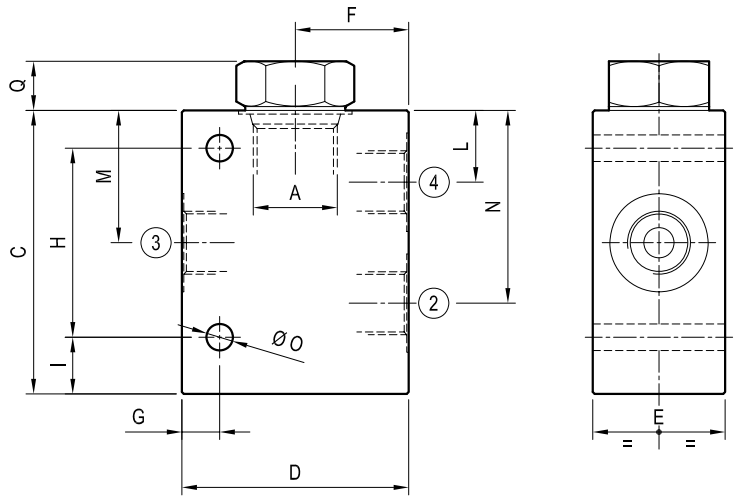

Technical data

Range of rated total flow: see table "Z"		
Max operating pressure for steel body:	350 bar	(5000 psi)
Max operating pressure for aluminium body:	210 bar	(3000 psi)

To order only manifold see data sheet RE 18325-85

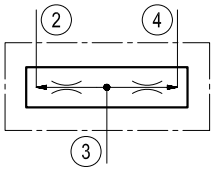

Table "Y"

Cavity A	Y	PORT SIZE 2 - 3 - 4		Flow l/min (gpm)	DIMENSIONS mm (Inches) C	D	E	F	G	H	I	L	M	N	O	Q	
SIZE 08																	
SIZE 10	02	G 3/8		see table "Z"	75 (2.95)	70 (2.95)	35 (1.38)	35 (1.38)	10 (0.39)	50 (1.97)	15 (0.59)	19 (0.75)	35 (1.38)	51 (2.01)	7 (0.28)	14 (0.55)	
	03	G 1/2			75 (2.95)	70 (2.95)	35 (1.38)	35 (1.38)	10 (0.39)	50 (1.97)	15 (0.59)	19 (0.75)	35 (1.38)	51 (2.01)	7 (0.28)		
SIZE 12																	
SIZE 16	04	G 3/4		see table "Z"	120 (4.72)	90 (3.54)	50 (1.97)	45 (1.77)	15 (0.59)	80 (3.15)	20 (0.79)	26 (1.02)	54.5 (2.15)	83 (3.27)	9 (0.35)	15 (0.59)	
	05	G 1			120 (4.72)	100 (3.94)	50 (1.97)	50 (1.97)	15 (0.59)	80 (3.15)	20 (0.79)	26 (1.02)	54.5 (2.15)	83 (3.27)	9 (0.35)		
SIZE 20																	

Cartridge style

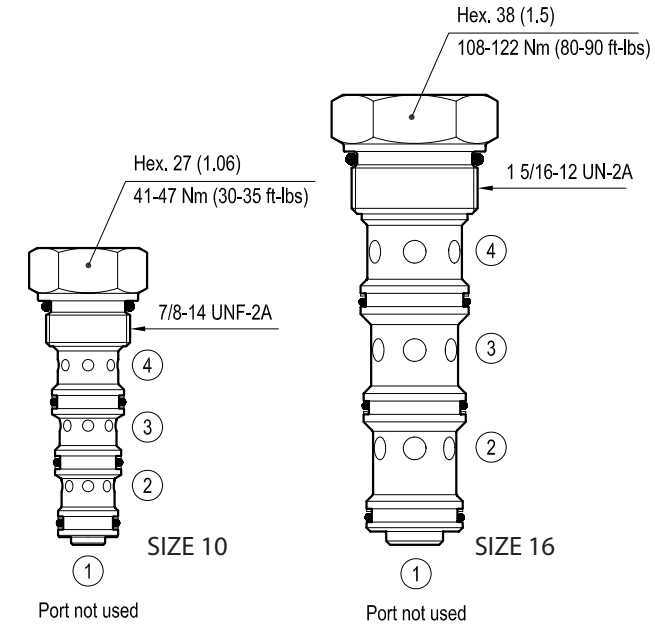

[mm (inches)]

Table "K"

			K				
CARTRIDGE CODE	04	05	04	00	85	Z	DSDN-10A
	04	05	03	00	27	Z	DSDN-16A

CARTRIDGE TECHNICAL DATA
Common cavity: CA-10A-4N / CA-16A-4N For other details see data sheet RE 18321-22 and RE18321-23

Table "Z"

Z	RANGE OF RATED TOTAL FLOW				
	SIZE 08	SIZE 10	SIZE 12	SIZE 16	SIZE 20
	l/min (gpm)	l/min (gpm)	l/min (gpm)	l/min (gpm)	l/min (gpm)
02		1-3 (0.26-0.79)			
04		2-6 (0.53-1.59)		15-44 (3.96-11.63)	
06				22-66 (5.81-17.44)	
08		5-13 (1.32-3.44)			
09				30-88 (7.93-23.25)	
13				44-132 (11.63-34.88)	
16		9-24 (2.38-6.34)		55-165 (14.53-43.59)	
25		14-37 (3.70-9.78)			
30		16-44 (4.23-11.63)			
40		20-54 (5.28-14.27)			

Performance graphs

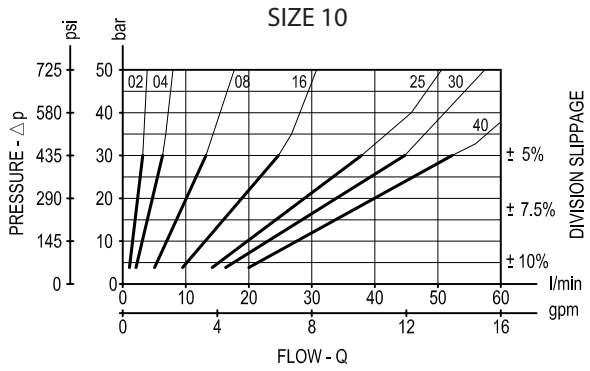

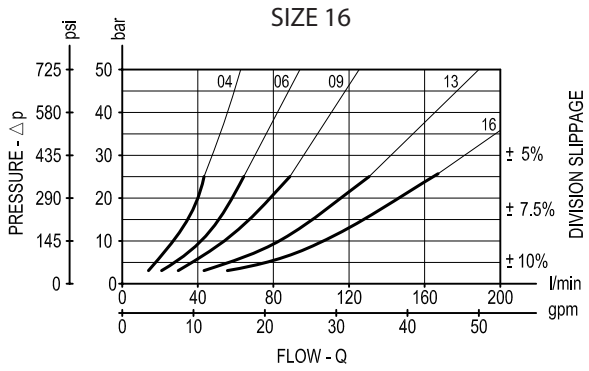

Ordering code

ON.07	K	00	Y	Z	W

Manifold with flow divider

Cartridge style - Common cavity
(see table K on page 2)

Manifold material

= 00	Aluminium manifold
= S0	Steel manifold

Settings - Range of rated total flow
(see table Z on page 2)

Manifold style - Dimensions and port sizes
(see table Y on page 1)

Preferred types (readily available)

Type	Material number
ON070400020 4S0	R934001260
ON070400021 6S0	R934001261
ON070400033 0S0	R934001262
ON0703000406S0	R934001263
ON070300041 3S0	R934001264
ON0703000516S0	R934001265
ON070400020400	R934001111

Type	Material number

Further types available by request

Bosch Rexroth Oil Control S.p.A.
Via Leonardo da Vinci 5
P.O. Box no. 5
41015 Nonantola – Modena, Italy
Tel. +39 059 887 611
Fax +39 059 547 848
integrated-circuits@oilcontrol.com
www.boschrexroth.com

© This document, as well as the data, specifications and other information set forth in it, are the exclusive property of Bosch Rexroth Oil Control S.p.a.. It may not be reproduced or given to third parties without its consent.

The data specified above only serve to describe the product. No statements concerning a certain condition or suitability for a certain application can be derived from our information. The information given does not release the user from the obligation of own judgment and verification. It must be remembered that our products are subject to a natural process of wear and aging.

Subject to change.