RE 18330-09/07.12
Replaces: RE 18330-09/04.10

Pressure reducing and relieving, pilot operated spool type

Common cavity

Cartridge style in manifold

VRPX-10A-C **OR.09 - K - X - Y - Z - W**

Dimensions

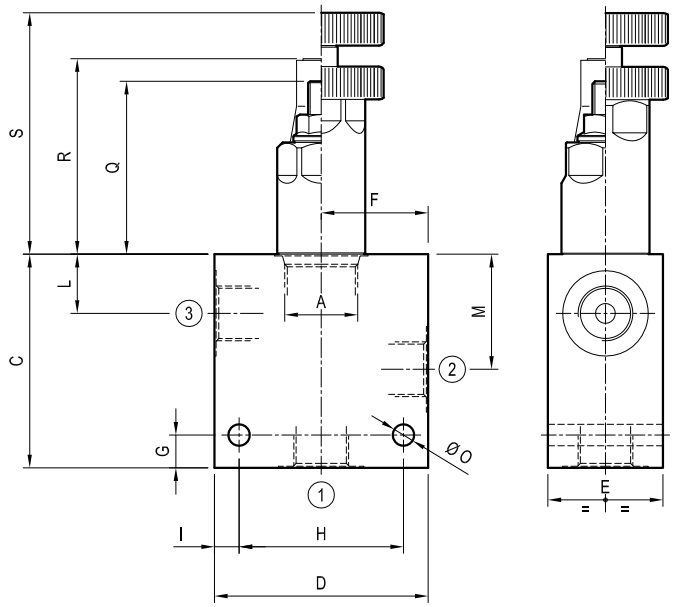

Technical data

Max flow:	up to 60 l/min	(16 gpm)
Max operating pressure for **steel** body:	350 bar	(5000 psi)
Max operating pressure for **aluminium** body:	210 bar	(3000 psi)

To order only manifold see data sheet RE 18325-85

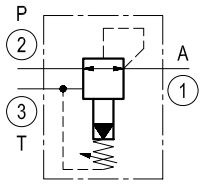

Table "Y"

Cavity A	Y	PORT SIZE 1 - 2 - 3		Max Flow l/min (gpm)	DIMENSIONS mm (Inches) C	D	E	F	G	H	I	L	M	O	Q	R	S
SIZE 08																	
SIZE 10	02	G 3/8		60 (16)	65 (2.56)	65 (2.56)	35 (1.38)	32.5 (1.28)	10 (0.39)	50 (1.97)	7.5 (0.30)	18 (0.71)	35 (1.38)	6.5 (0.26)	53 (2.09)	60 (2.36)	74 (2.91)
	03	G 1/2			70 (2.76)	70 (2.76)	35 (1.38)	35 (1.38)	15 (0.59)	50 (1.97)	10 (0.39)	18 (0.71)	35 (1.38)	6.5 (0.26)			
SIZE 12																	
SIZE 16																	
SIZE 20																	

Cartridge style

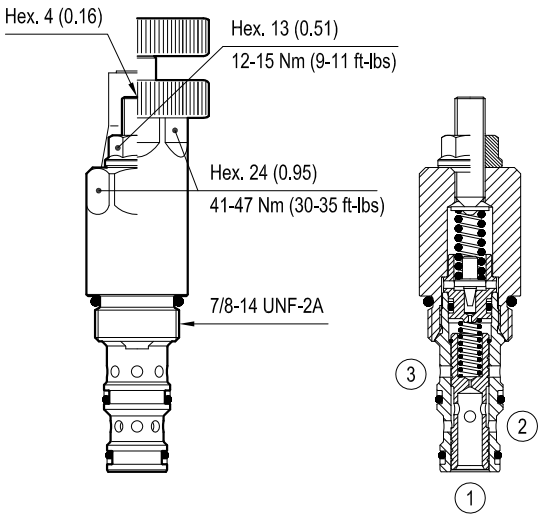

SIZE 10

[mm (inches)]

Table "K"

			K				
CARTRIDGE CODE	04	93	07	X	85	Z	VRPX-10A

Table "X"

X	ADJUSTMENTS	
03	Leakproof hex. socket screw	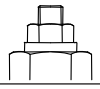
04	Handknob and locknut	

OPTIONS
Ordering code 11.04.23.002

CARTRIDGE TECHNICAL DATA
Common cavity: **CA-10A-3N** For other details see data sheet RE 18318-56

Table "Z"

Z		SPRINGS														
		SIZE 08			SIZE 10			SIZE 12			SIZE 16			SIZE 20		
		Adj. press. range bar(psi)	Pres. increase bar/turn (psi/turn)	Std. setting bar (psi) (reduc. mode)	Adj. press. range bar(psi)	Pres. increase bar/turn (psi/turn)	Std. setting bar (psi) (reduc. mode)	Adj. press. range bar(psi)	Pres. increase bar/turn (psi/turn)	Std. setting bar (psi) (reduc. mode)	Adj. press. range bar(psi)	Pres. increase bar/turn (psi/turn)	Std. setting bar (psi) (reduc. mode)	Adj. press. range bar(psi)	Pres. increase bar/turn (psi/turn)	Std. setting bar (psi) (reduc. mode)
X=03	05				25-100 (360-1450)	31 (450)	50 (725)									
X=03	10				35-140 (500-2000)	48 (696)	100 (1450)									
X=03	20				70-280 (1000-4000)	88 (1276)	200 (2900)									
X=04	35				35-350 (500-5000)	68 (986)	350 (5000)									

Performance graph

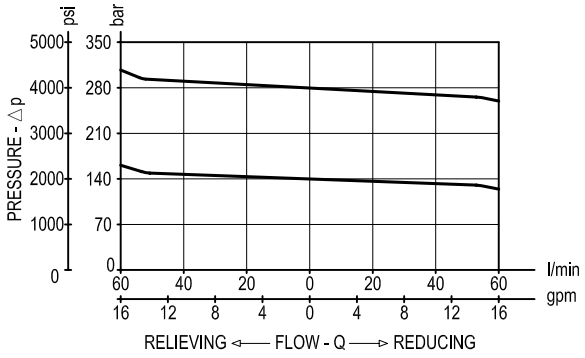

Ordering code

OR.09	K	X	Y	Z	W

Manifold with pressure reducing and relieving, pilot operated spool type

Cartridge style - Common cavity
(see table K on page 2)

Cartridge style - Adjustments
(see table X on page 2)

Manifold style - Dimensions and port sizes
(see table Y on page 1)

Settings - Springs
(see table Z on page 2)

Manifold material

= 00	Aluminium manifold
= S0	Steel manifold

Preferred types (readily available)

Type	Material number
OR0907030310S0	R934000752
OR0907030320S0	R934000631

Type	Material number

Further types available by request

Bosch Rexroth Oil Control S.p.A.
Via Leonardo da Vinci 5
P.O. Box no. 5
41015 Nonantola – Modena, Italy
Tel. +39 059 887 611
Fax +39 059 547 848
integrated-circuits@oilcontrol.com
www.boschrexroth.com

© This document, as well as the data, specifications and other information set forth in it, are the exclusive property of Bosch Rexroth Oil Control S.p.a.. It may not be reproduced or given to third parties without its consent.

The data specified above only serve to describe the product. No statements concerning a certain condition or suitability for a certain application can be derived from our information. The information given does not release the user from the obligation of own judgment and verification. It must be remembered that our products are subject to a natural process of wear and aging.

Subject to change.