RE 18330-45/07.10
Replaces: RE 00199/11.07

# Directional spool type, direct acting external pilot, internal vent

## Common cavity

## Cartridge style in manifold

VDSH-C OU.08 - K - X - Y - Z - W

## Dimensions

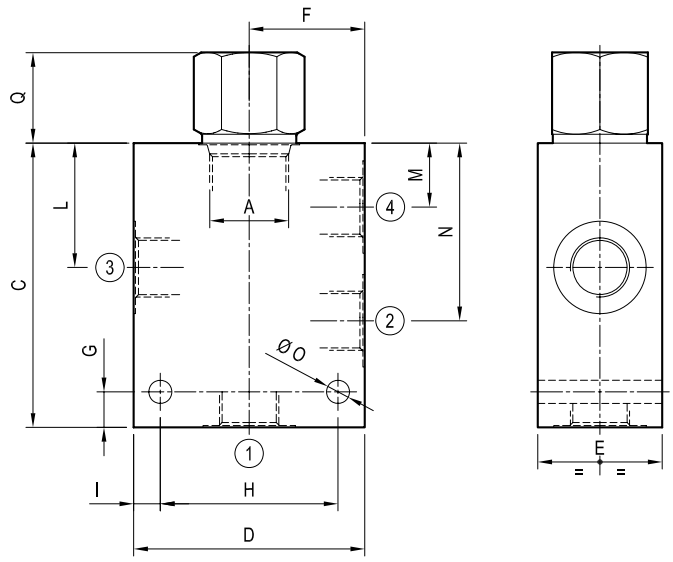


## Technical data

| | | |
|---|---|---|
| Max flow: | up to 160 l/min | (43 gpm) |
| Max operating pressure for steel body: | 350 bar | (5000 psi) |
| Max operating pressure for aluminium body: | 210 bar | (3000 psi) |

To order only manifold see data sheet RE 18325-85

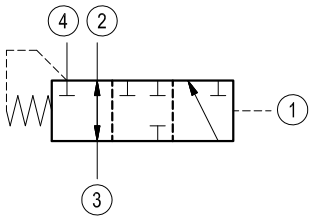


## Table "Y"

| Cavity A | Y | PORT SIZE 1 - 2 - 3 -4 | Max Flow l/min (gpm) | DIMENSIONS mm (Inches) C | D | E | F | G | H | I | L | M | N | O | Q | R |
|---|---|---|---|---|---|---|---|---|---|---|---|---|---|---|---|---|
| SIZE 08 | | | | | | | | | | | | | | | | |
| | | | | | | | | | | | | | | | | |
| SIZE 10 | 09 | G 1/4 | 40 (11) | 80 (3.15) | 65 (2.56) | 35 (1.38) | 32.5 (1.28) | 10 (0.39) | 50 (1.97) | 7.5 (0.30) | 35 (1.38) | 18 (0.71) | 50 (1.97) | 7.5 (0.30) | 31 (1.22) max. | |
| | 02 | G 3/8 | | 80 (3.15) | 65 (2.56) | 35 (1.38) | 32.5 (1.28) | 10 (0.39) | 50 (1.97) | 7.5 (0.30) | 35 (1.38) | 18 (0.71) | 50 (1.97) | 7.5 (0.30) | | |
| SIZE 12 | | | | | | | | | | | | | | | | |
| | | | | | | | | | | | | | | | | |
| SIZE 16 | 04 | G 3/4 | 160 (43) | 130 (5.12) | 90 (3.54) | 50 (1.97) | 45 (1.77) | 20 (0.79) | 60 (2.36) | 15 (0.59) | 54.5 (2.15) | 26 (1.02) | 83 (3.27) | 10.5 (0.41) | 50 (1.97) | |
| | 05 | G 1 | | 130 (5.12) | 100 (3.94) | 50 (1.97) | 50 (1.97) | 20 (0.79) | 60 (2.36) | 20 (0.79) | 54.5 (2.15) | 26 (1.02) | 83 (3.27) | 10.5 (0.41) | | |
| SIZE 20 | | | | | | | | | | | | | | | | |
| | | | | | | | | | | | | | | | | |

## Cartridge style

SIZE 10
Z = 05 and Z = 11 types

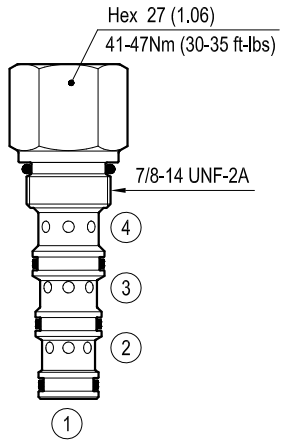


SIZE 10
Z =35 type

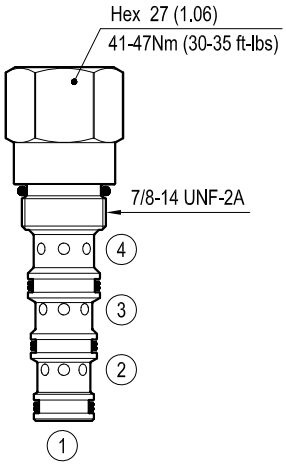


SIZE 16

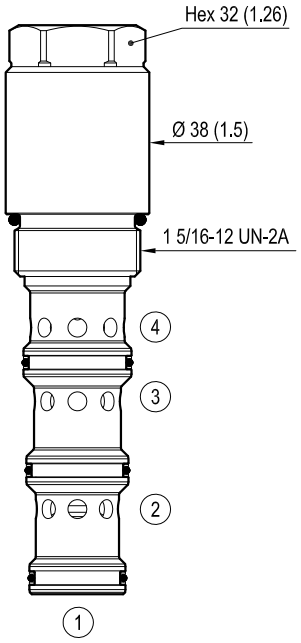


(mm) Inches

## Table "K"

| | | | | | K | | |
|---|---|---|---|---|---|---|---|
| CARTRIDGE CODE | 04 | 77 | 25 | X | 85 | Z | VDSH-10A |
| | 04 | 77 | 25 | X | 27 | Z | VDSH-16A |
| | | | | | | | |
| | | | | | | | |
| | | | | | | | |

## Table "X"

| X | Adjustments | |
|---|---|---|
| 00 | Fixed setting | |
| | | |

| CARTRIDGE TECHNICAL DATA |
|---|
| Common cavity: CA-10A-4N / CA-16A-4N<br><br>For other details see data sheet RE 18320-75 and RE 18320-85 |

## Table "Z"

| Z | SPRINGS | | | | | | | | | | | | | | |
|---|---|---|---|---|---|---|---|---|---|---|---|---|---|---|---|
| | SIZE 08 | | | SIZE 10 | | | SIZE 12 | | | SIZE 16 | | | SIZE 20 | | |
| | Setting pressure bar(psi) | | | Setting pressure bar(psi) | | | Setting pressure bar(psi) | | | Setting pressure bar(psi) | | | Setting pressure bar(psi) | | |
| 05 | | | | 5.5 ±20% (80 ±20%) | | | | | | 5 ±20% (73 ±20%) | | | | | |
| 11 | | | | 11.5 ±10% (167 ±10%) | | | | | | 11 ±10% (160 ±10%) | | | | | |
| 35 | | | | 35 ±10% (508 ±10%) | | | | | | | | | | | |
| | | | | | | | | | | | | | | | |
| | | | | | | | | | | | | | | | |
| | | | | | | | | | | | | | | | |

## Performance graphs

SIZE 10

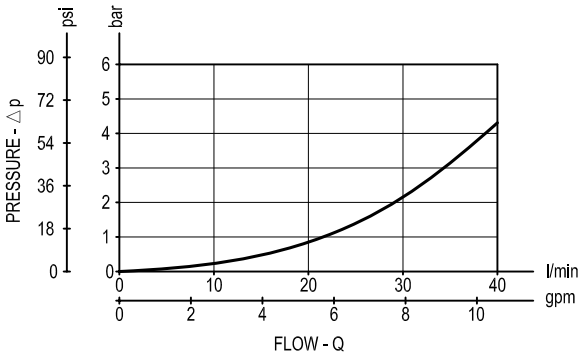


SIZE 16

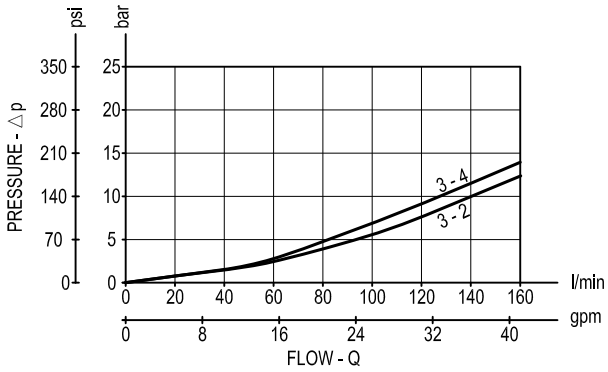

## Ordering code

| OU.08 | K | X | Y | Z | W |
|---|---|---|---|---|---|

Manifold with directional spool type, direct acting external pilot, internal vent.

Cartridge style - Common cavity (see table K on page 2)

Cartridge style - O-Ring on pilot piston (see table X on page 2)

Manifold style - Dimensions and port sizes (see table Y on page 1)

Settings - Springs (see table Z on page 2)

Manifold material

| | |
|---|---|
| = 00 | Aluminium manifold |
| = S0 | Steel manifold |

## Preferred types (readily available)

| Type | Material number |
|---|---|
| OU082700505S0 | R934003579 |
| OU088500020500 | R934000385 |

| Type | Material number |
|---|---|

Further types available by request

Bosch Rexroth Oil Control S.p.A.
Via Leonardo da Vinci 5
P.O. Box no. 5
41015 Nonantola – Modena, Italy
Tel. +39 059 887 611
Fax +39 059 547 848
integrated-circuits@oilcontrol.com
www.boschrexroth.com

© This document, as well as the data, specifications and other information set forth in it, are the exclusive property of Bosch Rexroth Oil Control S.p.a.. It may not be reproduced or given to third parties without its consent.

The data specified above only serve to describe the product. No statements concerning a certain condition or suitability for a certain application can be derived from our information. The information given does not release the user from the obligation of own judgment and verification. It must be remembered that our products are subject to a natural process of wear and aging.

Subject to change.